FANG XING®

PSP™ STEEL

NEW Solution for Roofing and Wall of Industrial and Commercial Building

Started from 1987

Corrosion Resistance

PSP™ Steel is coated by synthetic resin film on both sides, which protect the product from corrosion resulted from acid, alkali, salt and chemical emissions.

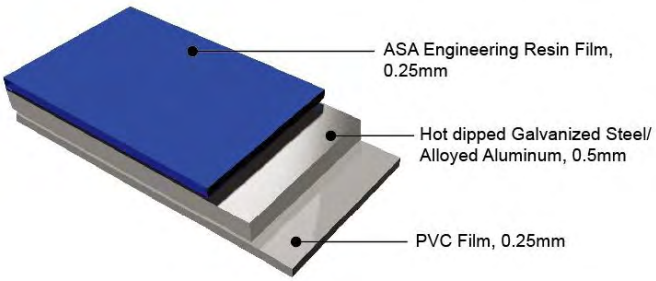

The surface material ASA engineering resin film is a very compact material, which can significantly prevent the permeability of corrosive material.

FANG XING®

Comparison between Color Coated Steel and PSP™ Steel Panel in microscope

Color Coated Steel

PSP™ Steel Panel

It shows that there are many crevices on the surface of color coated steel, the corrosive material will penetrate easily, which will reduce the life span of the product. While the surface of PSP™ Steel is very intact.

Normally, the coating thickness of Color Coated Steel is from 15μm to 35 μm, while the coating thickness of PSP™ Steel is 250μm, ten times of that of Color Coated Steel.

Comparison between Color Coated Steel and PSP™ Steel Panel after soaked in 20% sulfuric acid for 22 hours

Color Coated Steel

PSP™ Steel

As we can see from the pictures, the coating surface of Color Coated Steel has been seriously corroded and the coating has peeled off. While there is no change on the surface of PSP™ Steel.

Warranty

Based on our over ten years of experience of using ASA engineering resin in outdoor environment, we offer 10 years warranty for the color.
In general environment, we offer 20 years life warranty.
For corrosive environment, please contact our technical team.

FANG XING®

Cooling Effect

The surface engineering resin material uses infra-red reflection technology, which can reflect over 30% of infra-red ray.

Fire Resistance

PSP™ Steel can meet Class A requirement of all kinds of buildings.

Electricity Insulation

PSP™ Steel is coated by two layers of synthetic resin material, which protect the product from electricity conducting. It's a safe material.

Excellent Mechanical Properties

PSP™ Steel has the same mechanical property with the Hot Galvanized Steel.

Application Fields

- ☐ Airport
- ☐ Metallurgy
- ☐ Chemical
- ☐ Electroplating
- ☐ Casting
- ☐ Railway Station
- ☐ Agriculture
- ☐ Non-ferrous Metal
- ☐ Cultivation
- ☐ Paper Making
- ☐ Commercial
- ☐ Exhibition center
- ☐ Stalinization
- ☐ Chlor-alkali
- ☐ Brewing

Color Choices

Ocean Blue | Silver Grey | Cream White

Physical Properties

Thickness (mm)	1.0mm
Width (mm)	1200mm
Yield strength (MPa)	380
Tensile Strength (MPa)	420
Elongation (%)	27

FANG XING

A
B

FANG XING®

Technical Data

Properties	Results	Test Methods
Resistance to Color Change 12000h Accelerated Aging Test	Delta E=2.23	GB/T 16422.2-1999
Adhesion	Grade A3	GB/T 18847-2002
Bending	No fissure, flaw, peeling	GB/T 18847-2002
Low Temperature Processing	No fissure, flaw, peeling	GB/T 18847-2002
Resistance to Heat Soaked in boling water	No fissure, flaw, peeling	GB/T 18847-2002
Resistance to Dirt Mark Pen and Kerosene	No dirt, color change or fading	GB/T 18847-2002
Resistance to Corrosion Exposure 1000h	No rusting	GB/T 18847-2002
Self-extinguishment	Flame extinguish at 1"780"'	GB/T 18847-2002
Resistance to Impact Cupping Test	Maximum depression depth 11.1mm	GB/T 9753-2007
Resistance to Fire	A2	GB 8624-2012
Resistance to Acid 20%H_2SO_4, 15%HCl, 20%H_3PO_4, 20%HF,20%HNO_3,120h	No chalkiness, corrosion,blistering	GB/T 3857-2005
Resistance to Alkali 5% N_aOH, Ammonia Water, Chlorine Water,120h	No chalkiness, corrosion,blistering	GB/T 3857-2005

Three Choices for Profiled PSP™ Steel

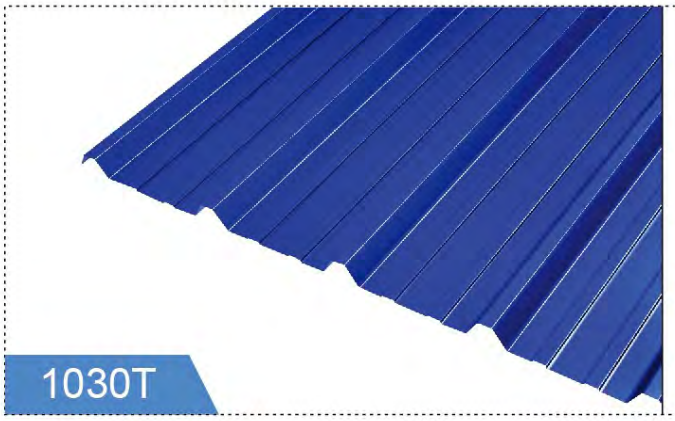

1030T

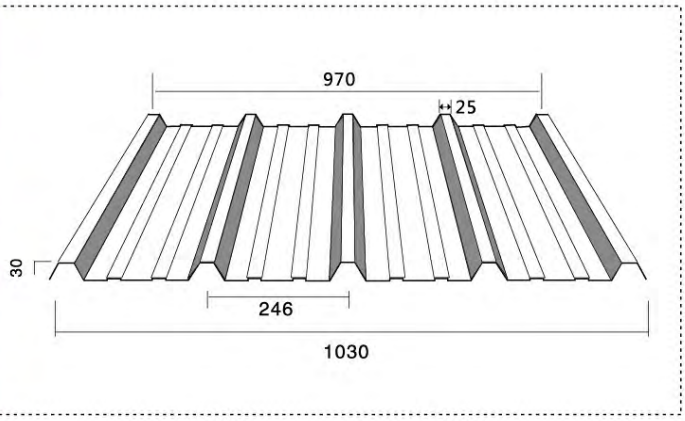

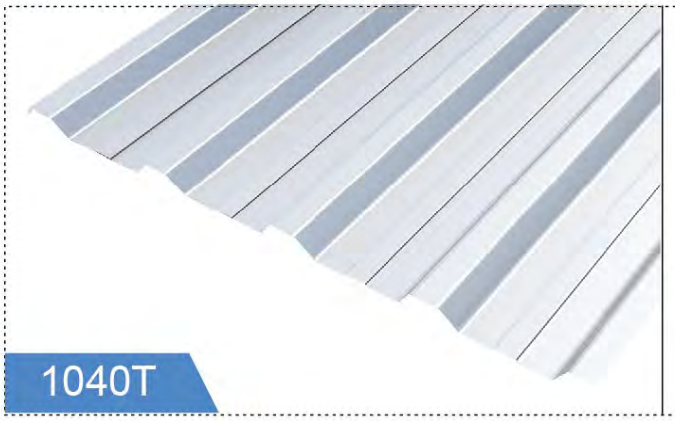

1040T

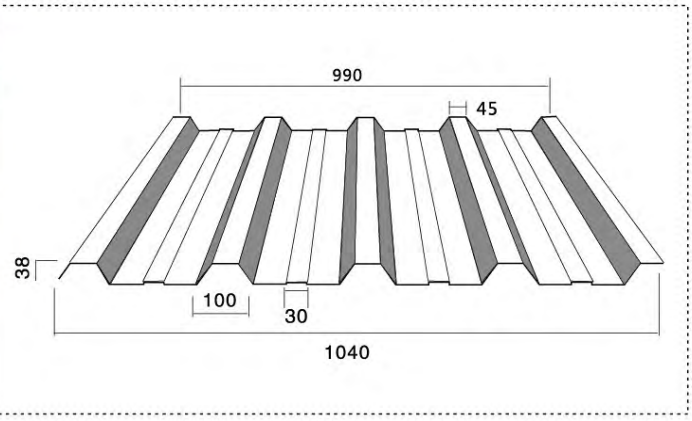

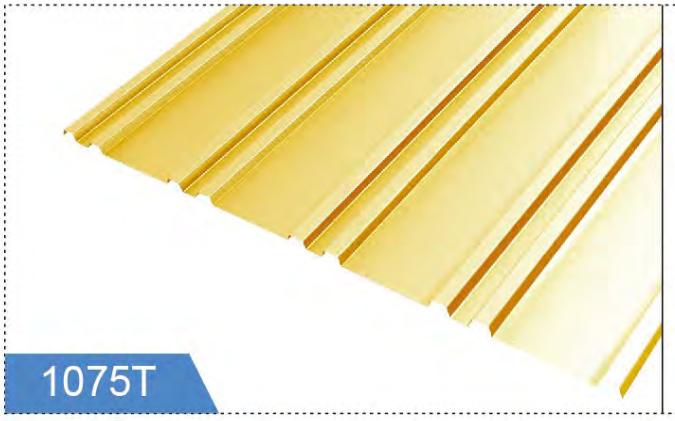

1075T

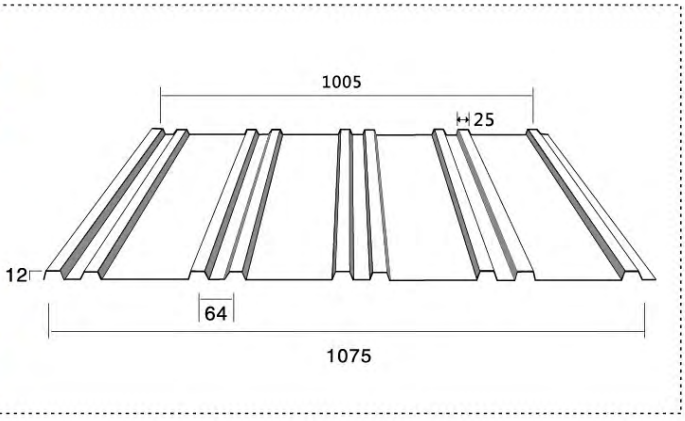

FANG XING®

Plastic coated Steel Purlin

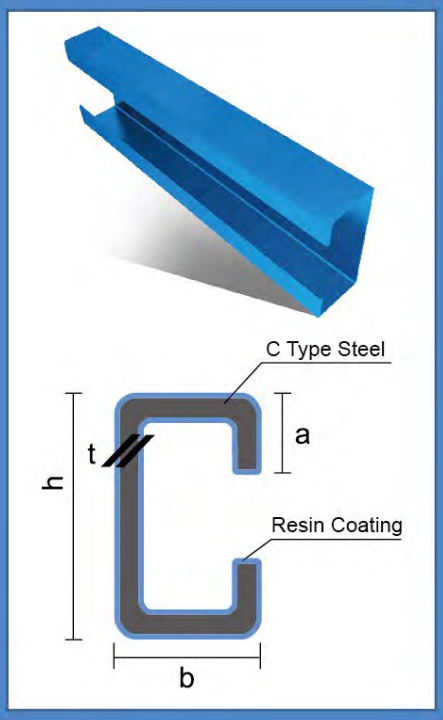

Resistance to Corrosion

The resin coating has excellent anti-corrosion performance, after soaked in 20%H2SO4, 15%HCl, 20%H3PO4, 20%HF,20%HNO3, 5% NaOH, ammonia water, chlorine water for 120hrs, the product has no change.

Long Lasting, No Maintenance

The resin coating prevent the steel from exposing to the corrosion environment, which make the product last more longer than common treatment.

Resistance to Extreme Weather

The product will not peel, blister or crack from -80℃ to 240℃.

Fast Installation

Purlins are connected by bolts, design and installation according to National Designing Standard 11G51-122.

Variable Choices

NO.	mm			
	h	b	a	t
1	120	50	20	2.5
2	120	50	20	3.0
3	140	50	20	2.5
4	140	50	20	3.0
5	160	60	20	2.5
6	160	60	20	3.0
7	180	70	20	2.5
8	180	70	20	3.0
9	200	70	20	2.5

NO.	mm			
	h	b	a	t
10	200	70	20	3.0
11	220	75	20	2.5
12	220	75	25	3.0
13	250	75	20	2.5
14	250	75	20	3.0
15	280	80	20	2.5
16	280	80	25	3.0
17	300	80	20	2.5
18	300	80	25	3.0

Suggested sizes

Accessories

Anti-corrosive Brace

Mounting Block

Fastener

FANG XING®

Shandong Fangxing Building Materials Co., Ltd.
7150 Yuhai Road, Laizhou 261400, Shandong, P.R.C
Tel: 0086-532-85039205
Fax: 0086-532-85039203
E-mail: inquiry@fangxing.com
www.fangxingroofing.com